41st Argos Operations Committee Meeting

Saint-Jean-de-Luz, FRANCE

June 5th to 7th, 2007

E-1-3 – SARAL Satellite – CNES/ISRO

ARGOS-3 ON SARAL

- ✓ MOU signed in February 2007 between CNES and ISRO
- ✓ The Indian government will be notified of user platforms collecting data in their Exclusive Economic Zone (EEZ) as per the Convention Law of the Sea Part 5
- ✓ Polar Orbit @ 800 km with Ascending node at 6:00 am
- ✓ Satellite ready for launch end of 2009
- ✓ ISRO in charge of platform, launch and TM/TC operations
- ✓ CNES in charge of PIM (Payload Integrated Module) with Altika and Argos payloads, mission operations
- ✓ Argos-3 instrument is the one originally dedicated to NPOESS-C1
- ✓ CNES to provide also UHF antenna, diplexer, L-band transmitter and antenna to download real time mission telemetry, electrical interface box with SSB bus, payload control thermal, payload power distribution

SARAL SPACECRAFT 3D VIEW

(DEPLOYED CONFIGURATION)

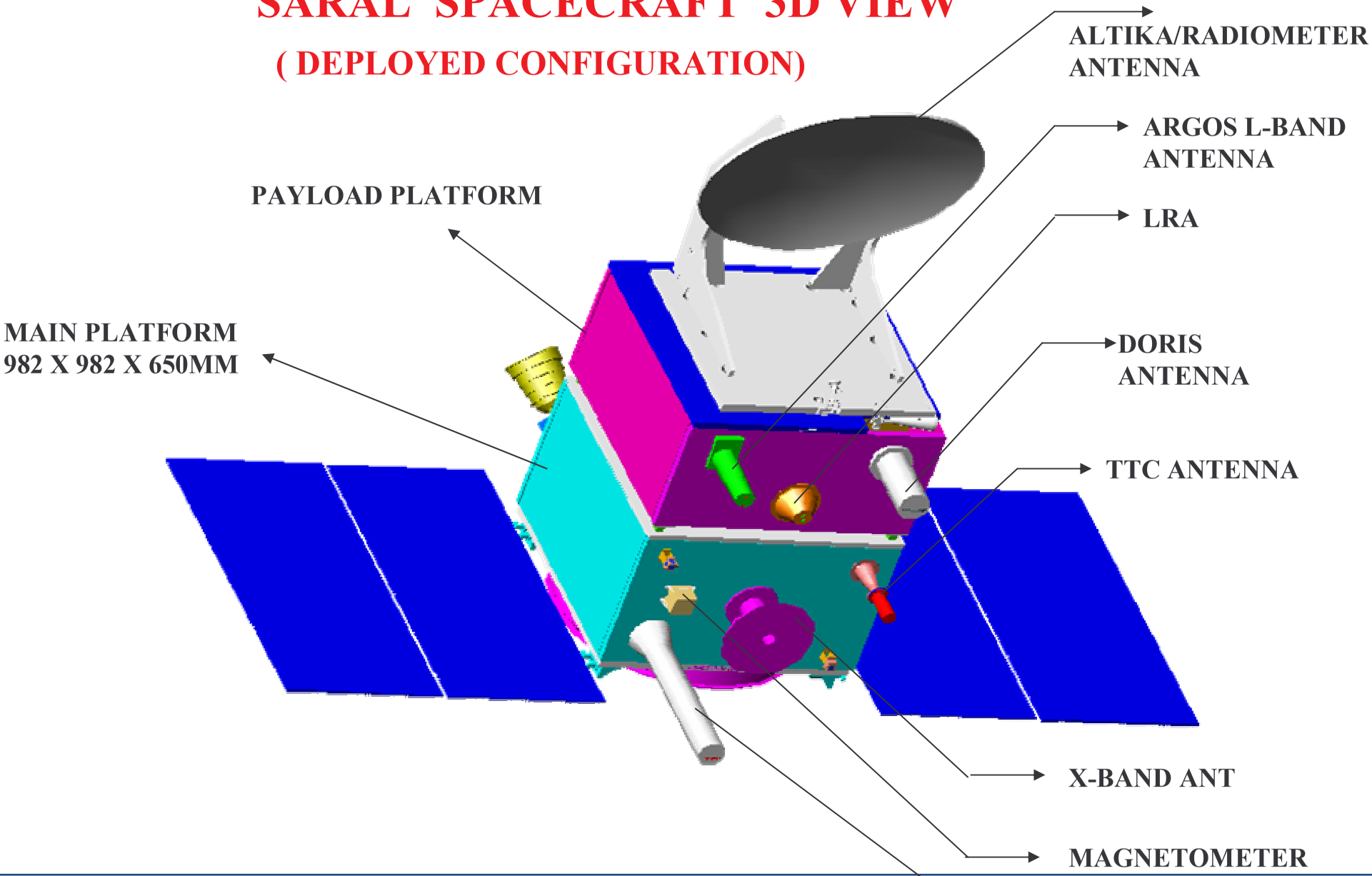

SARAL CONFIGURATION

HIGHLIGHTS

1. SMALL SATELLITE SIZE 982MM X 982MMX 2.6Mts (APPROX)
2. MASS 350 KGS TO 400 KGS
3. PAYLOAD PLATFORM INTEGRATED WITH STANDARDIZED MAIN BUS
4. PAYLOADS – ARGOS AND ALTIKA ACCOMMODATED ON PAYLOAD PLATFORM
5. STAR SENSOR IN LOOP ATTITUDE CONTROL
6. MONO PROPOLLENT RCS WITH 8 NOS, **1N** THRUSTERS
7. TO BE LAUNCHED BY PSLV

SARAL CONFIGURATION

MAIN PLATFORM:

NEW STRUCTURE FOR MAIN PLATFORM BUILT ON 937 DIA PSLV ADOPTER WITH HONEY COMB DECKS AND CORNER PILLERS.

LI-ION BATTERY (1&2)

TWO SOLAR PANELS ON

+/ - ROLL SIDE (SIZE= 1200MM x 700MM

S-BAND TRANSMITTER and RECEIVER (M & R)

X- BAND TRANSMITTER (M & R)

MINIATURE DUEL HEAD STAR SENSOR

FOUR PHI SUN SENSOR (4 HEADS)

MINIATURE MAGNETOMETER

REACTION WHEELS

MAGNETIC TORQUERS(3 NOS)

SARAL SPACECRAFT 3D VIEW

AXES

DEFINITION

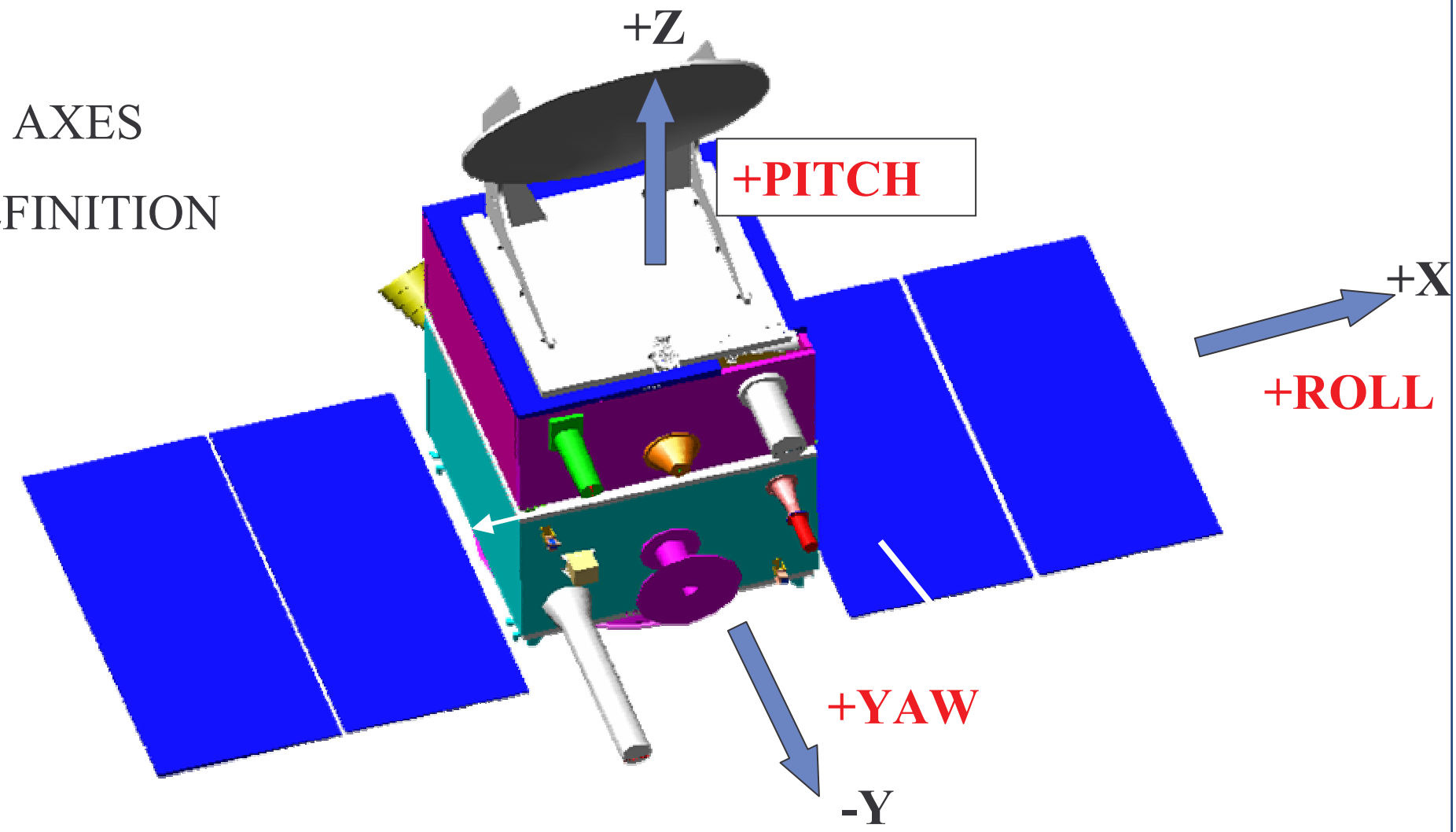

SARAL SPACECRAFT 3D VIEW

(DEPLOYED CONFIGURATION)

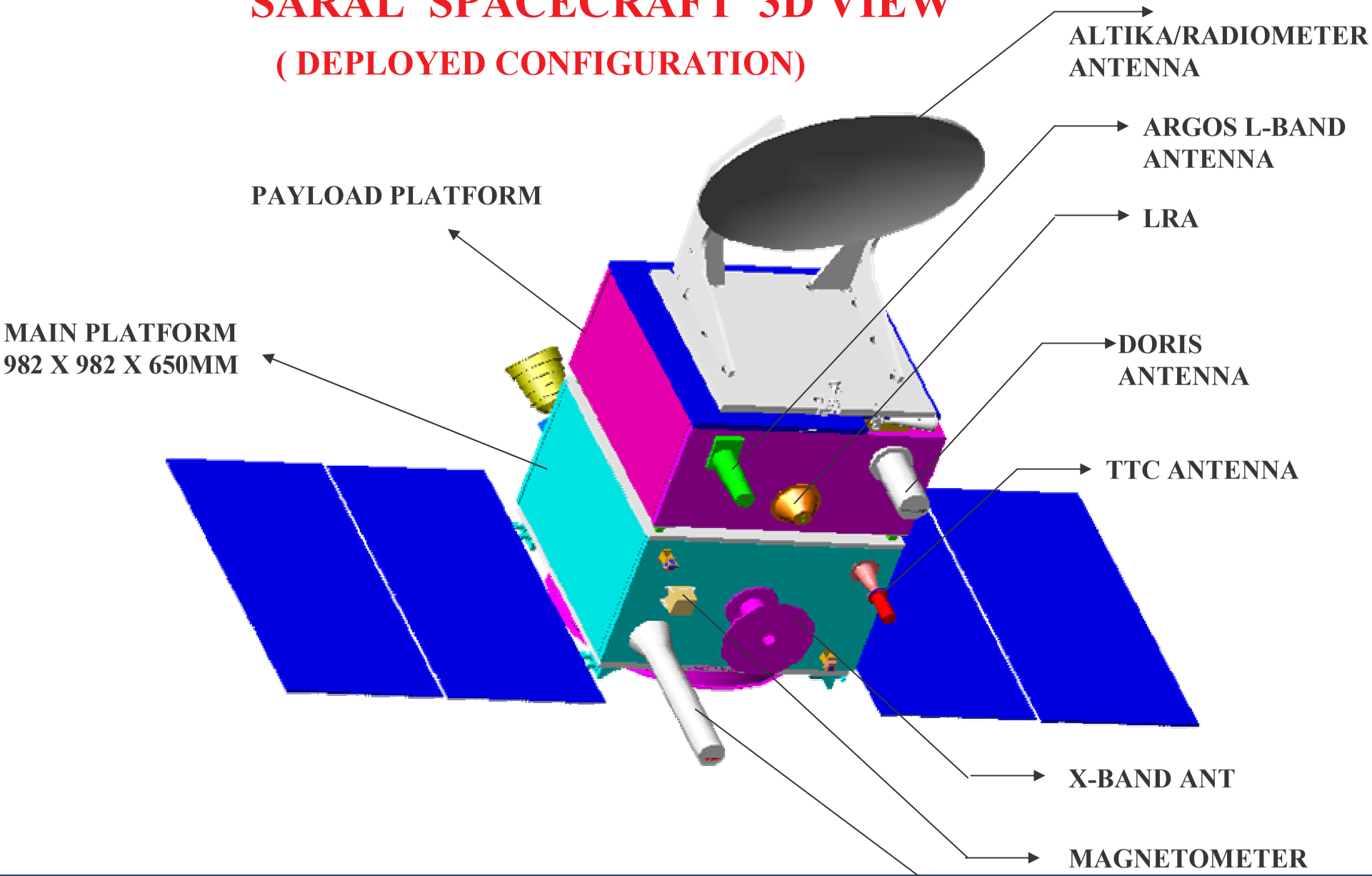

SARAL SPACECRAFT 3D VIEW

(STOWED CONFIGURATION)

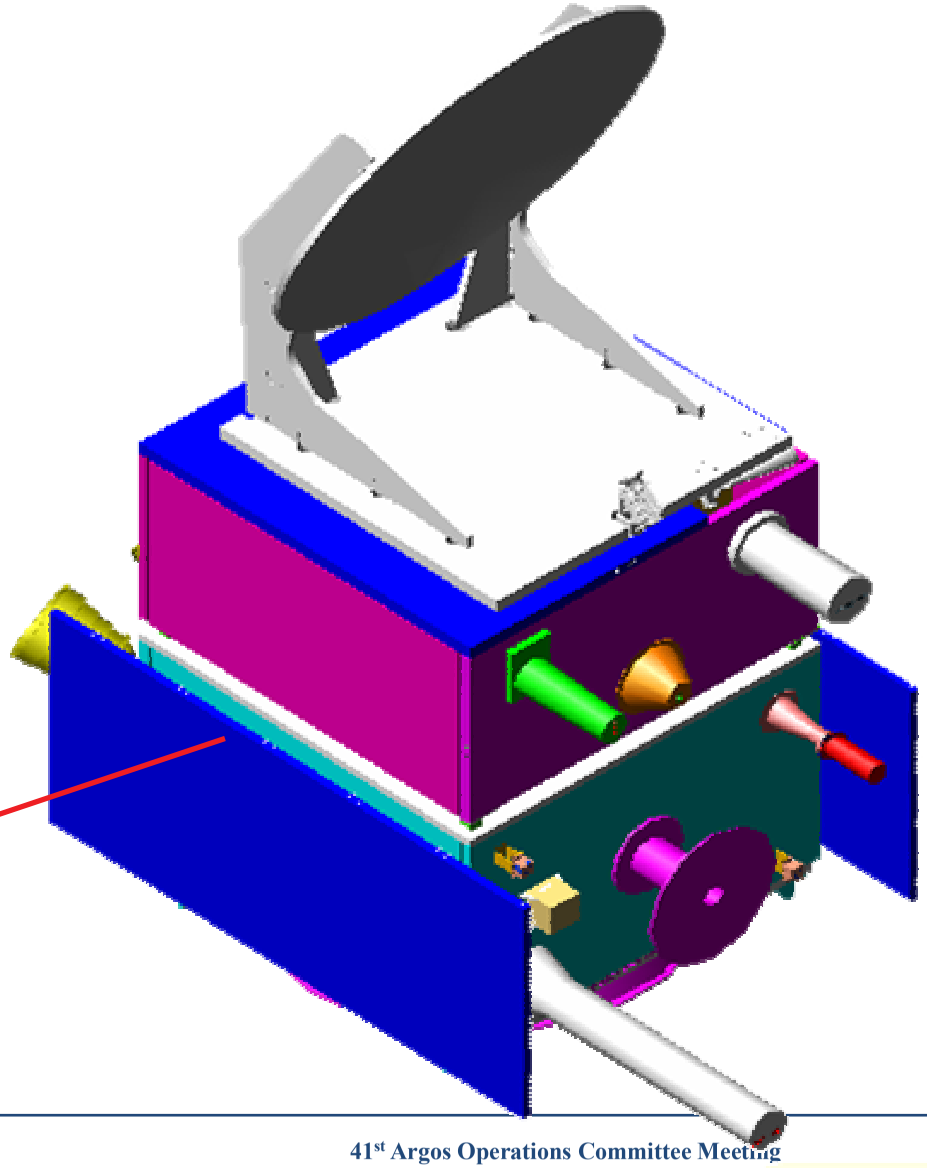

SOLAR PANEL SIZE= 1200 X 700MM

(2 NOS ON EACH SIDE)

PLAN VIEW OF MAIN PLATFORM

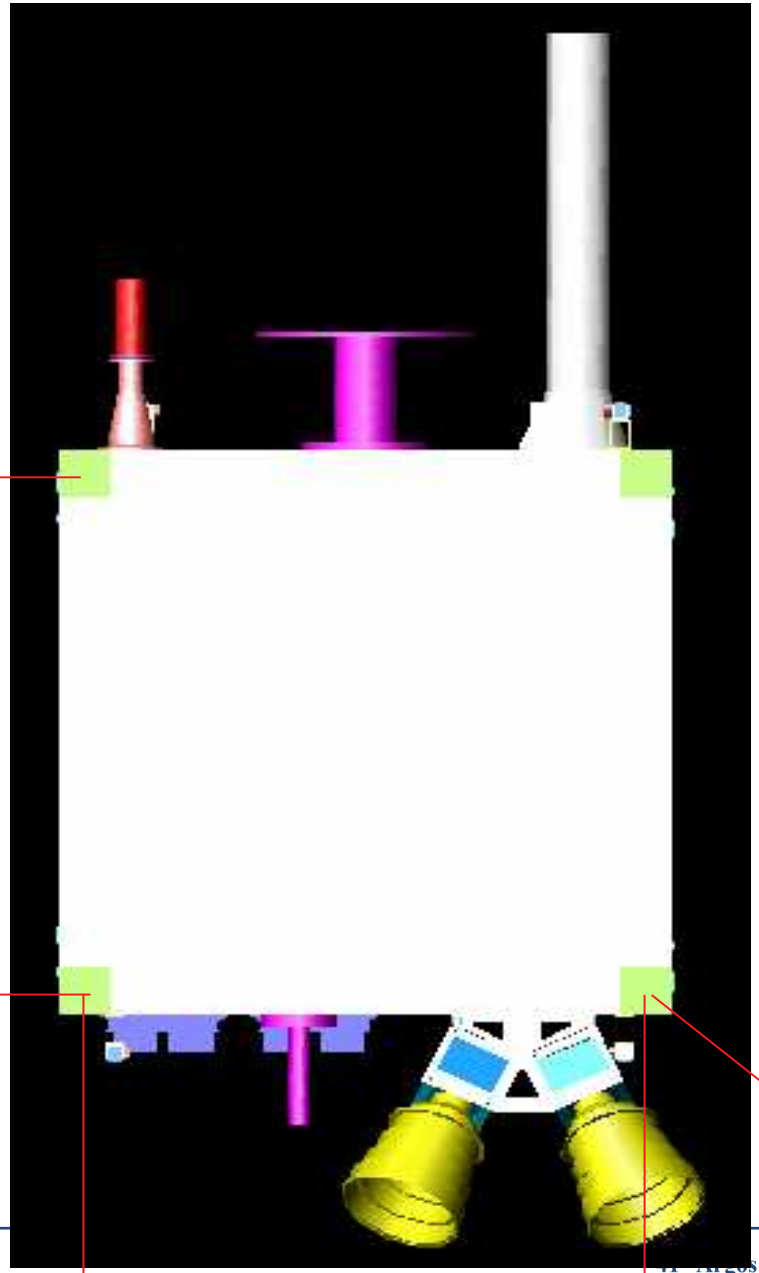

890 MM

890 MM

ELEVATION OF MAIN PLATFORM

50 MM

650 MM

PAYLOAD PLATFORM INTERFACE

MAIN PLATFORM 3D VIEW

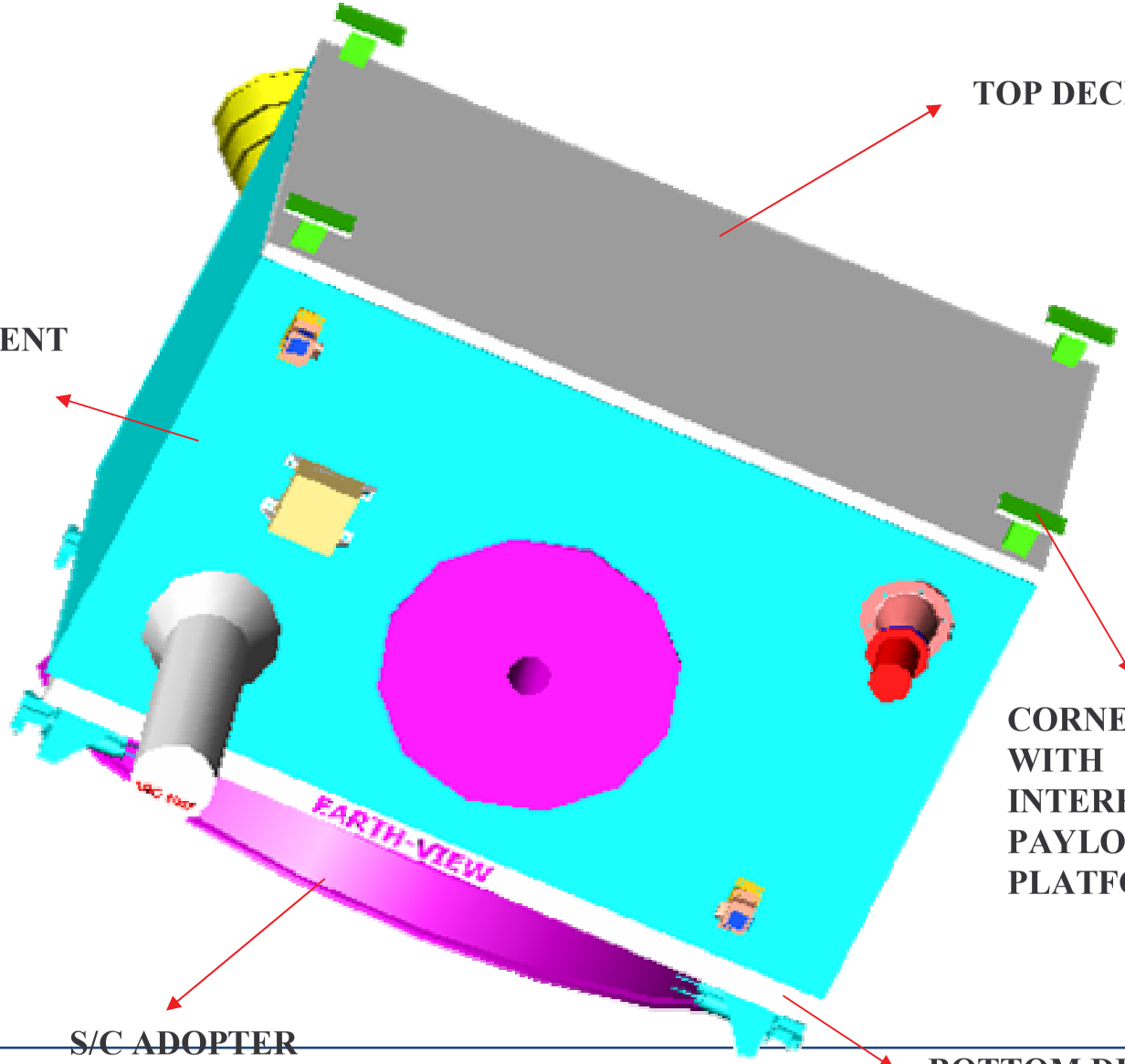

TOP DECK

MAIN PLATFORM EQUIPMENT PANELS EP-01,EP-02,EP-03 AND EP-04 IN CLOCKWISE

CORNER PILLERS WITH INTERFACE FOR PAYLOAD PLATFORM

S/C ADOPTER

BOTTOM DECK

SARAL INTEGRATED PAYLOAD MODULE

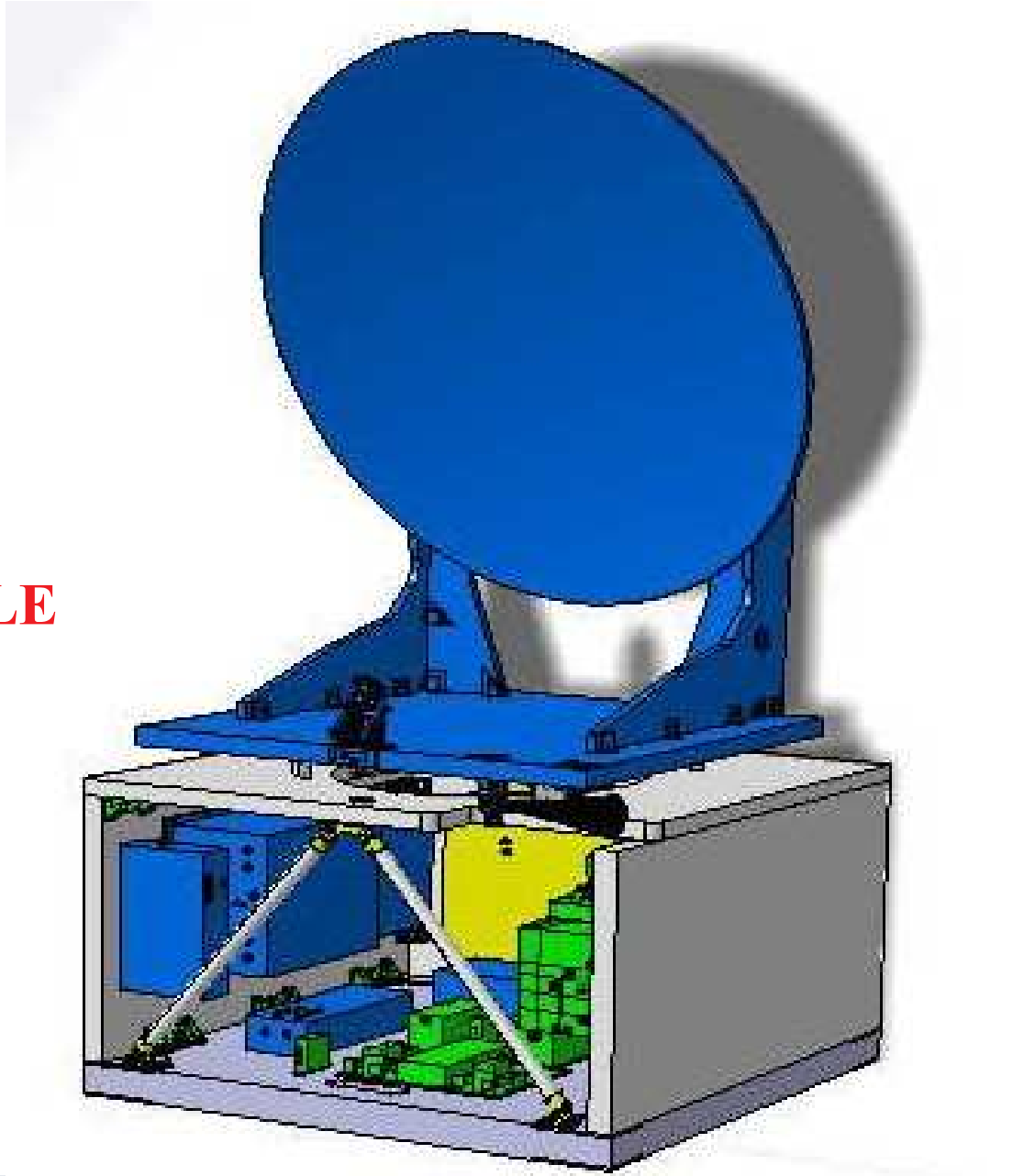

PIM Internal view

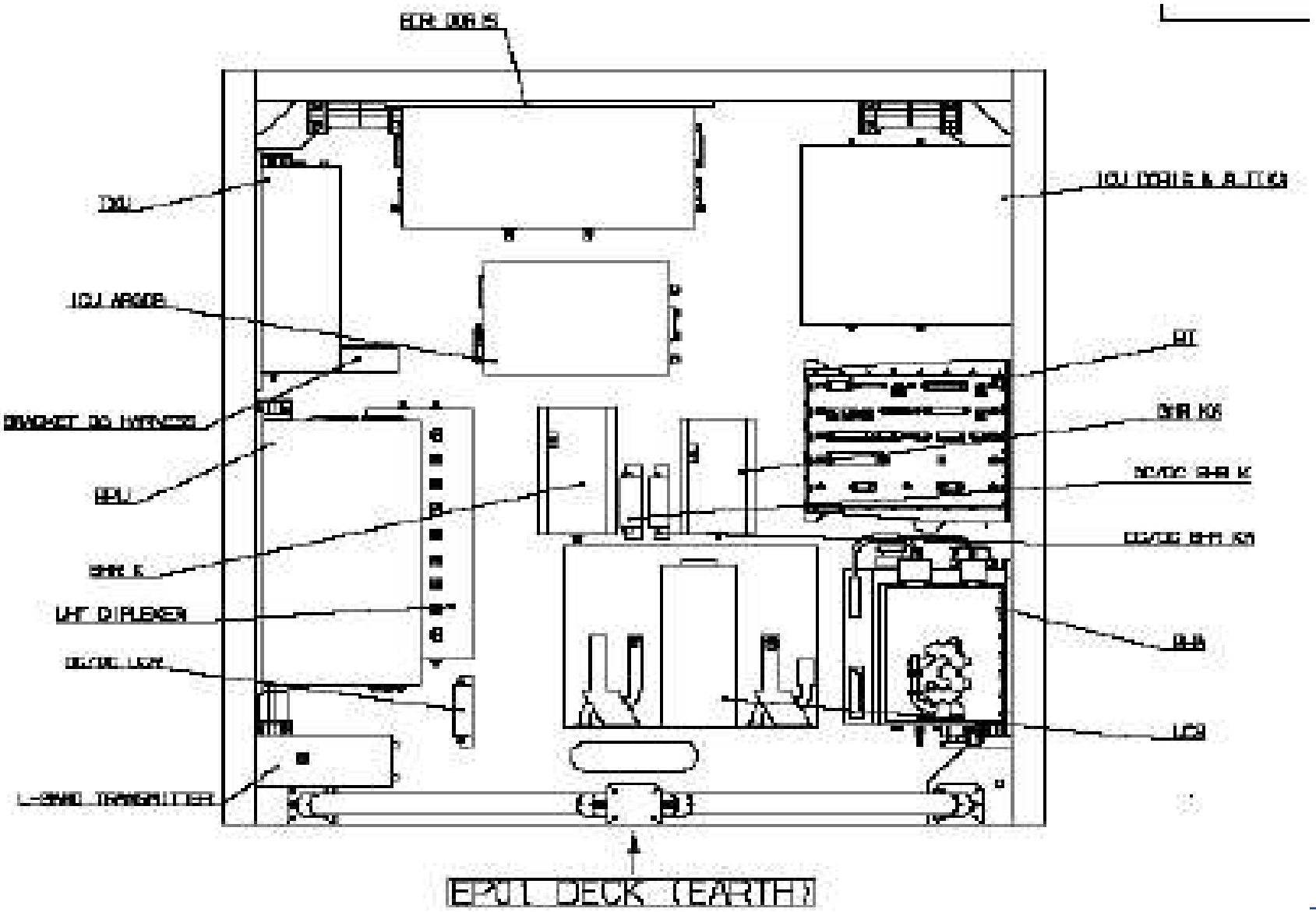

SARAL PIM BUDGETS

PIM Mass Budget

Payload module	132 kg
Inter-instruments harness	*8,0 kg*
ICUs (2 boxes)	*7,6 kg*
Structure	*30,9 kg*
Argos	*28,8 kg*
Altika	*40,5 kg*
Doris	*16,5 kg*
Payloood units on platform	7 kg
Instruments to antennas harness	*2,0 kg*
Argos L-Band antenna	*0,3 kg*
Argos UHF antenna	*2,1 kg*
Doris Antenna	*2,0 kg*
LRA	*1,0 kg*
Total nominal mass	140 kg
PIM +5%	139 kg
On-Platform +5%	8 kg
Total +5%	147 kg

PIM Power Budget

ICUs (2 boxes)	17 W
Argos	63 W
RPU	*29,0 W*
TXU	*23,0 W*
L-Band transmitter	*11,0 W*
Harness	
Altika	80 W
DPU	*28,5 W*
ARFU	*41,0 W*
RCU	*1,5 W*
Ku-band RRFU	*3,8 W*
Ka-band RRFU	*3,2 W*
RRFU converters	*2,0 W*
Harness	
Doris	23 W
Total nominal consumption	183 W
Margin 5%	*9,2 W*
Total max consumption	192 W

SARAL ARGOS OPERATIONS
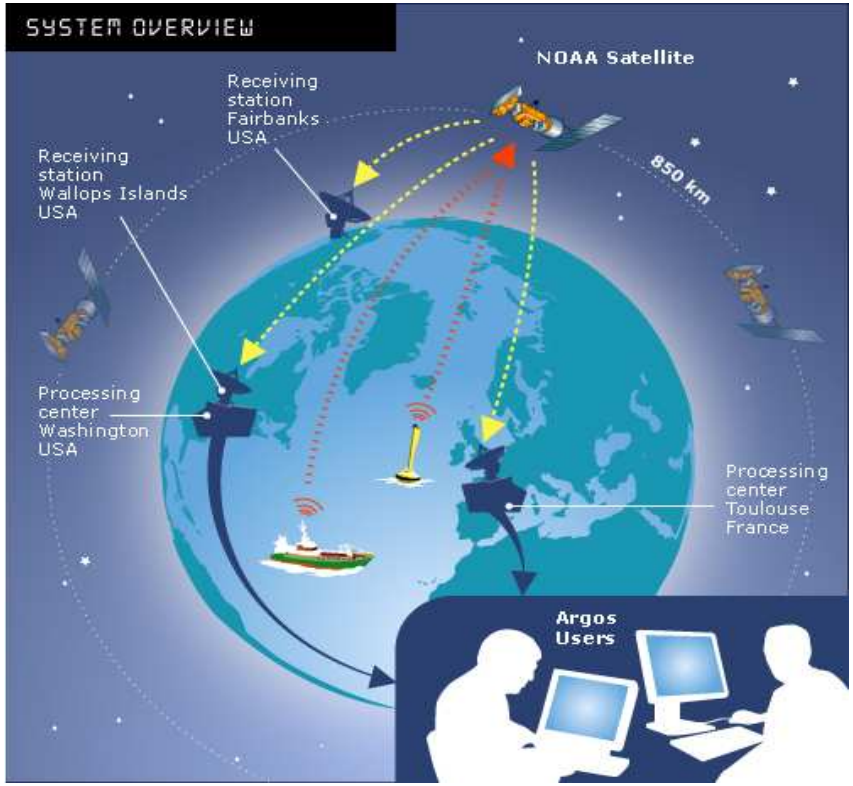
- ✓ **Operation** managed by CLS, located in Toulouse and Washington
- ✓ Two modes for data transmission
  - ➢ Real time transmission through worldwide L band network (continuous blind transmission)
  - ➢ Differed dump of on board memory through X band network
- ✓ All mission data from L and X bands stations are received and processed by the 2 ARGOS Mission Centers (Toulouse and Washington)
- ✓ Downlink messages by CNES/CLS
  - ➢ Managed by the DMMC (Downlink Message Management Center)
    - → Update of on board software,
    - → Time reference
  - ➢ Downlink messages to be transmitted to user platforms are send to on board transmitter though master beacons